Ahsanullah University of Science & Technology

DEPARTMENT OF ELECTRICAL AND ELECTRONIC ENGINEERING

PROGRAM: B.Sc. in EEE

Open Ended Lab : Project Report

PROJECT NAME:

Automatic Load Sharing of Transformer with Overload and Overheat protection using Arduino

COURSE NO. : **EEE 4252**

COURSE TITLE : **Power System Protection Lab**

SECTION : **AB**

YEAR : **4th**

SEMESTER : **2nd**

SUBMITTED BY:

1. Arafat Hossain Rupok (20210205021)
2. Syeed Afridi (20210205030)
3. Kamruzzaman Rahat Khan (20210205031)
4. Mahathir Bin Mahbub(20210205043)
5. Arpita Saha (20210105104)
6. Samin Yasar (20210105245)
7. Tanjina Sultana Tania (20210105257)
8. Iqra Binte Walid(20200205058)

SUBMITTED TO:

- Mr. Md. Abdullah-Al-Mamun, Lecturer Grade-I
-

CO-PO-KPA mapping

CO Statement: Implement different protective relays for the protection of power system network

CO-PO-KPA mapping

CO Statement: Implement different protective mechanism for the protection of power system network

1. **Description of Applicable CEP Attributes (P)**

Ps	Attributes	Put tick (√) mark	Description
P1	Depth of knowledge required	√	Cannot be resolved without in-depth engineering knowledge at the level of one or more of K3, K4, K5, K6 or K8 which allows a fundamentals-based, first principles analytical approach
P2	Range of conflicting requirements	√	Involve wide-ranging or conflicting technical, engineering and other issues
P3	Depth of analysis required	√	Have no obvious solution and require abstract thinking, originality in analysis to formulate suitable models
P4	Familiarity of issues		
P5	Extent of applicable codes		
P6	Extent of stakeholder involvement and needs		
P7	Interdependence	√	Are high-level problems including many component parts or sub-problems

2. **Description of Applicable Knowledge Profiles (K)**

Ks	Attributes	Put tick (√) mark	Description
K3	Engineering fundamentals	√	A systematic, theory-based formulation of engineering fundamentals required in the engineering discipline
K4	Specialist knowledge		Engineering specialist knowledge that provides theoretical frameworks and bodies of knowledge for the accepted practice areas in the engineering discipline; much is at the forefront of the discipline
K5	Engineering Design	√	Knowledge that supports engineering design in a practice area
K6	Engineering practice		Knowledge of engineering practice (technology) in the practice areas in the engineering discipline

K8	Research Literature	√	Engagement with selected knowledge in the research literature of the discipline

3. Description of Complex Engineering Activities (A)

As	Attributes	Put tick (√) mark	Description
A1	Range of Resources	√	Involve the use of diverse resources (and for this purpose resources include people, money, equipment, materials, information and technologies)
A2	Level of Interaction	√	Require resolution of significant problems arising from interactions between wide-ranging or conflicting technical, engineering or other issues
A3	Innovation		Involve creative use of engineering principles and research-based knowledge in novel ways
A4	Consequences for Society and the Environment	√	Have significant consequences in a range of contexts, characterized by difficulty of prediction and mitigation

Objective:

The objective of this project is to **demonstrate load monitoring and protection** by using sensors, relays, and a microcontroller to measure voltage, current, and power, monitor temperature, switch loads safely, and respond to overload or overheating.

Equipment list:

1. Arduino Uno
2. Relay Module
3. Voltage Sensor
4. DS18B20 Temperature Sensor
5. INA 219 Current sensor
6. Transformer
7. Bridge Rectifier
8. LCD 1602 with I2C module
9. 3.7 V Battery
10. Push Switch
11. PVC Board
12. LM2596 Buck Converter
13. Light Bulb
14. 12 V Cooling Fan
15. Jumper Wire
16. 2 pin Plug

Working principle of Important Equipment:

1. Arduino UNO:

The Arduino Uno serves as the central controller of the system, continuously reading data from the voltage sensor and INA219 to monitor voltage, current, and calculate power, as well as from the DS18B20 temperature sensor to detect overheating. Based on this information, it controls the relay module to safely switch loads on or off and activates the 12V cooling fan if the temperature exceeds a set limit. At the same time, the Arduino updates the LCD 1602 display to show real-time readings of voltage, current, power, and temperature, allowing the user to monitor the system status easily.

2. Relay Module

The relay module acts as a **switching interface** between the Arduino Uno and the connected loads. It receives control signals from the Arduino based on the readings from the voltage, current, and temperature sensors. When an overload or overheating condition is detected, the relay module **disconnects the loads** to protect the system. It also allows the Arduino to **turn the DC light and other loads on or off** automatically according to the programmed logic. Additionally, it works in combination with the manual rocker and push switches, giving the user the ability to **control the loads directly** when needed.

3. Voltage Sensor

The voltage sensor is used to **continuously measure the voltage** supplied to the system and its loads. It sends this data to the Arduino Uno, which uses the information to **monitor the system's operating conditions** and detect any abnormal voltage levels. By providing accurate voltage readings, it helps the Arduino decide when to **switch loads on or off via the relay module** to prevent damage. The voltage sensor also allows the system to **calculate real-time power** when combined with the current measurements from the INA219. Its readings are displayed on the LCD, giving the user a clear view of the system's voltage status at any time.

4. Temperature Sensor

The DS18B20 temperature sensor is used to **monitor the system's temperature** in real time. It sends temperature readings to the Arduino Uno, which uses this information to **detect overheating conditions** in the system. If the temperature exceeds a predefined limit, the Arduino can **activate the 12V cooling fan** or switch off loads via the relay module to protect the system. The sensor provides **accurate digital temperature data**, which can also be displayed on the LCD, allowing the user to see the system's thermal status continuously. Its one-wire interface makes it easy to connect multiple sensors if needed, without using many Arduino pins.

5. Transformer:

The transformer is used to **step down the high input voltage to a lower, safer level** suitable for the system. It provides the initial power supply by reducing the voltage before it is converted into DC by the bridge rectifier. This lower voltage is then further regulated by the buck converter to power the Arduino, sensors, and other components. By isolating and reducing the voltage, the transformer ensures **safe operation and compatibility** with low-voltage electronic devices used in the project.

Logic Flow :

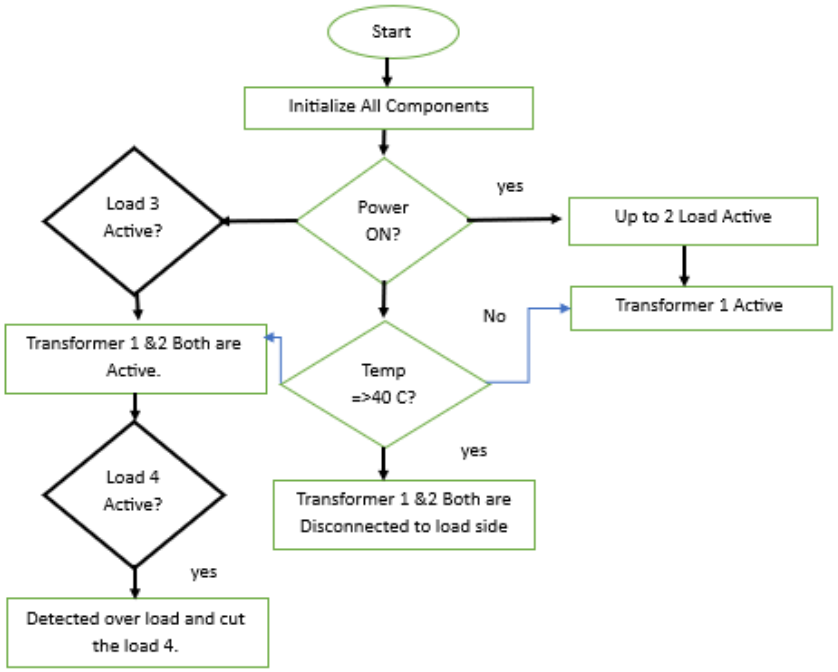

Block Diagram:

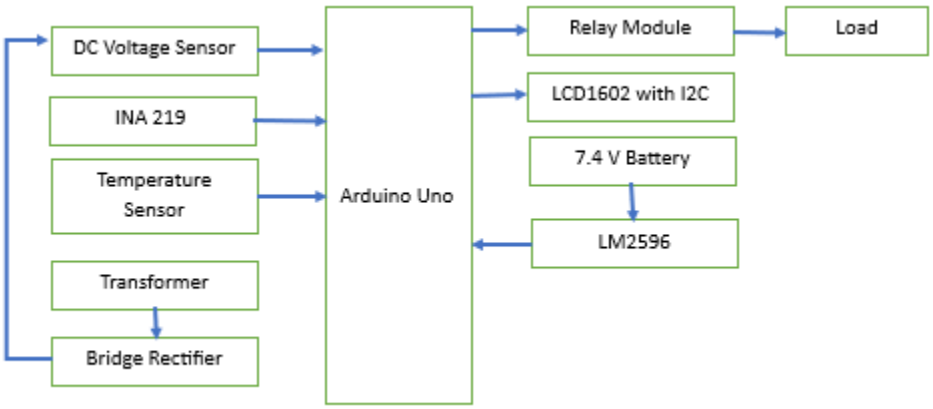

Working Principle:

The system operates by first reducing the input voltage through a **transformer**, after which it is converted and regulated to a suitable level using a **bridge rectifier** and **buck converter**. The **Arduino Uno** functions as the control unit, continuously collecting data from the **voltage sensor**, **INA219**, and **temperature sensor** to monitor the electrical and thermal condition of the system. Using this data, it evaluates the operating state and accordingly controls the **relay module** to manage the connected loads. Under normal conditions, the loads operate while all parameters are displayed on the **LCD display** for real-time observation. When abnormal conditions such as excessive current, high power consumption, or elevated temperature are detected, the Arduino initiates protective actions by disconnecting the loads and activating the **cooling fan**. In this way, the system integrates **measurement**, **control**, and **protection** into a single coordinated operation to ensure safe and reliable performance.

Project Picture:

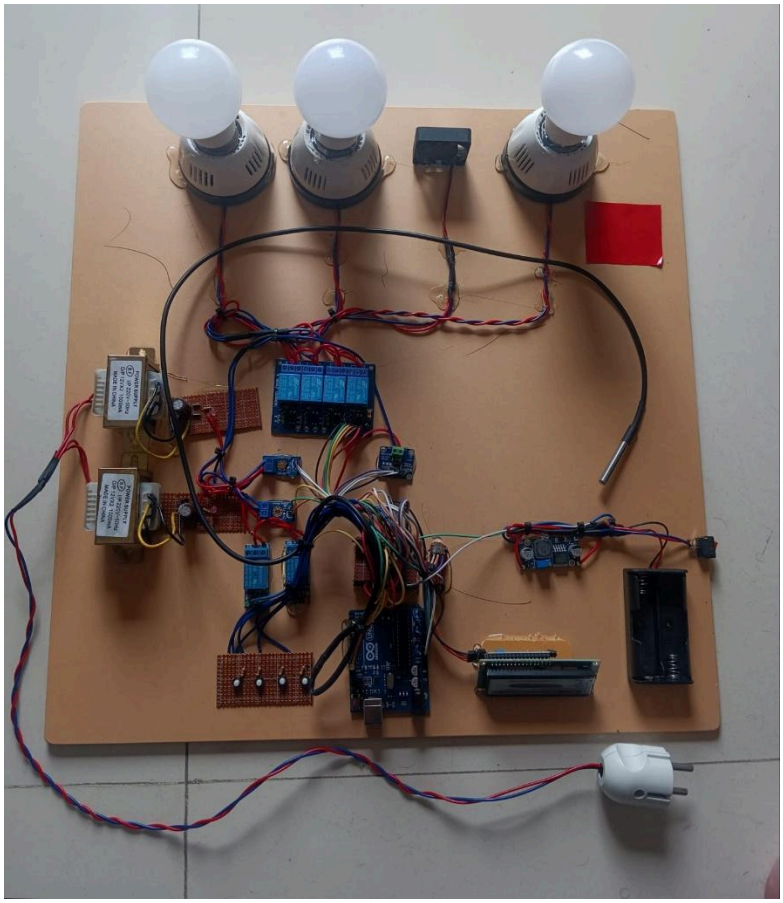

Advantages:

- Provides **continuous and accurate monitoring** of voltage, current, power, and temperature
- Enables **fast and automatic fault detection and isolation**
- Improves **system reliability and safety** by preventing damage due to overload or overheating
- Allows **centralized control and coordination** of multiple loads
- Supports **real-time data display and logging** for better system analysis
- Can be **easily expanded and integrated** with advanced protection schemes
- Reduces **human error** through automation
-

Disadvantages :

- **Complex design and configuration** compared to simple protection methods
- Higher **initial cost** due to sensors, controllers, and control circuitry
- Requires **regular maintenance and calibration** for accurate performance
- Dependence on control system means **failure of controller can affect entire system**
- Needs **proper programming and setup**, which increases system complexity
- May introduce **delays in decision-making** compared to purely hardware-based protection in critical cases

Improvements:

The system can be further improved by enhancing its accuracy, reliability, and functionality. More advanced and precise sensors can be used to ensure better measurement of electrical parameters. The control system can be upgraded by implementing more sophisticated algorithms for faster and more accurate protection decisions. Additional protection features

such as fault classification and selective tripping can also be incorporated to make the system more efficient. Communication modules can be added to enable remote monitoring and control, allowing users to access system data from a distance. Moreover, integrating data logging and analysis features would help in better understanding system performance over time. These improvements would make the system more robust, intelligent, and closer to real-world power system protection applications.

Discussion

The project successfully demonstrates the principles of power system monitoring and protection in a compact, automated setup. By integrating sensors for voltage, current, power, and temperature, the Arduino Uno continuously assesses the system's condition and takes protective actions when abnormal conditions such as overload or overheating occur. The relay module ensures that connected loads are switched safely, preventing potential damage, while the cooling fan provides thermal protection. Real-time data displayed on the LCD allows users to observe system performance and verify the effectiveness of the protection measures.

This system highlights the importance of measurement, control, and automation in modern power systems, showing how faults can be detected and isolated without human intervention. While the current setup is small-scale, the working principle can be extended to larger and more complex systems with multiple loads, advanced fault detection, and coordinated relay operation. Improvements such as enhanced sensors, fault classification, remote monitoring, and data logging can make the system more intelligent, reliable, and closer to industrial applications. Overall, the project provides a hands-on understanding of load protection, fault management, and system monitoring, bridging theoretical knowledge with practical implementation.

References:

1. **G. S. Rahi and A. K. Gupta**, "Microcontroller Based Protection of Distribution System Using Overcurrent and Thermal Overload Detection," *2017 International Conference on Power, Control, Signals and Instrumentation Engineering (ICPCSI)*, Chennai, India, 2017, pp. 1171–1176.
2. **S. M. Islam, M. A. Rahman and M. Z. H. Bhuiyan**, "Design and Implementation of an Arduino Based Over Current and Over Temperature Protection System," *International Journal of Electrical and Computer Engineering (IJECE)*, vol. 12, no. 3, pp. 2345–2352, June 2022.
3. **A. Elmoursi and I. Batarseh**, "A Survey of Power System Protection Schemes and Microcontroller-Based Fault Detection Techniques," *IEEE Transactions on Power Delivery*, vol. 35, no. 2, pp. 456–465, April 2020.